CB ELECTRONICS

Loddonside, Lands End House, Beggars Hill Road, Charvil, Berks RG10 0UD, UK
Tel: +44 (0)118 9320345, Fax: +44 (0)118 9320346, www.colinbroad.com

CB Extended Communication Protocol

All CB SR/MR/RM control systems can have at least one Sony P2 9 pin input,

The Sony P2 input normally operates as follows:-

Commands:

Transport Commands, Merged with commands to current master machine
Record Command, sent to all record enabled machines
Track Arming, sent to current record machine or multiple machines.

Status Requests:

Transport tallies from current master port.
Lock Status, set when all machines in group are locked.
Locate Status, set when any machine in group is locating.
Record Status, Set when any machine in group is in record

To provide a full multi machine control interface an extended protocol have been developed with different manufactures. The format of these commands and status replies follow the standard Sony format. There are two different models for the communications as follows:-

1) Extensions using the standard controller and controlled device protocol. Suitable for existing systems.
2) Extensions using cyclic status reporting. recomended for new systems.

The standard Sony model requires video syncs to provide frame edge timing, the cyclic status reporting does not require this as messages are sent on the frame edge.

Most commands other than Cyclic Reporting On/Off and data requests may be used whichever model you chose to use.

Example 1
16 Keys are added to an existing Sony Interface, in order to provide 1) Multiple machines and 2) 24 Track Arming. As the system is designed to be used with the CB RM-6 or a Soundmaster system the control codes are the same as Soundmaster macro keys. The 16 keys are assigned as follows:-
1-8 Tracks 1..8
9 Bank Select
10 Macro
11 Chase Enable
12 Select Machine Port A
13 Select Machine Port B
14 Select Machine Port C
15 Select Machine Port D
16 Select Machine Port E

Commands C1 58 00 .. C1 58 0F are used for each key
Request tally status with C1 59 XY where X is the offset and Y is the number of bytes
The Response D2 59 TT TT where TT TT is the LED bit Map for each switch.

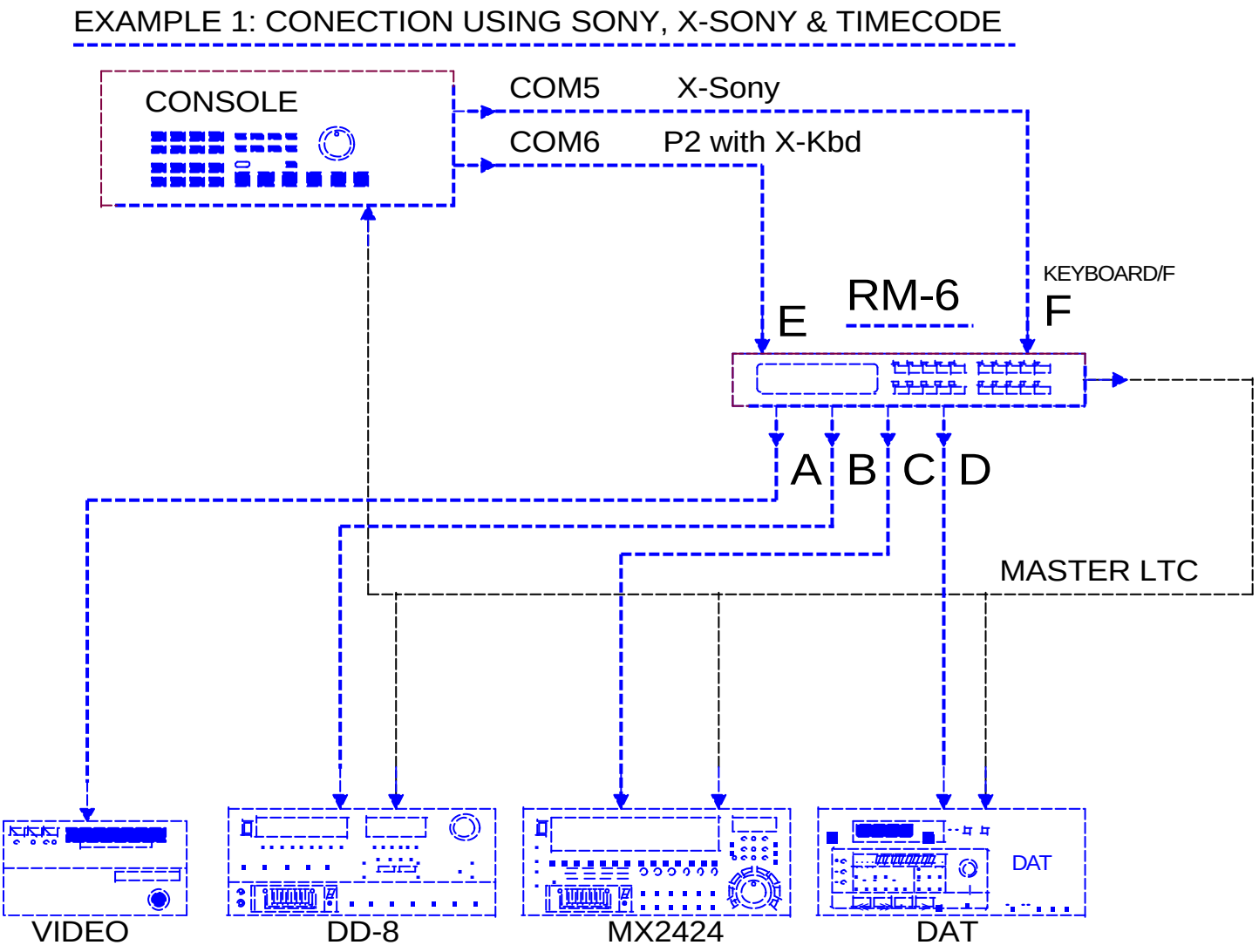

The master timecode output from the RM6 is used by the automation for positional reference. In this way the user can select the Master from any of the available ports.

By using two ports on the controlling computer and the RM6 the CB Windows Software Suite may be added to provide master position, Lock and Record staus, system overview, and track arming indication.

Example 2
A RM-6 is used as the automation interface replacing the timecode reader, timecode generator, and 9 pin ports.

The full CB X-Sony protocol is used as this does not require the automation computer to have a timecode reader or video sync interupt input. The CB Windows Software Suit (WSS) is fitted to the Automation computer, The automation computer talks to the WSS using windows messages. The Automation recieves the Master position once per frame. Sub frame accuracy may be obtained by synchronising an internal timer to the once per frame position message.

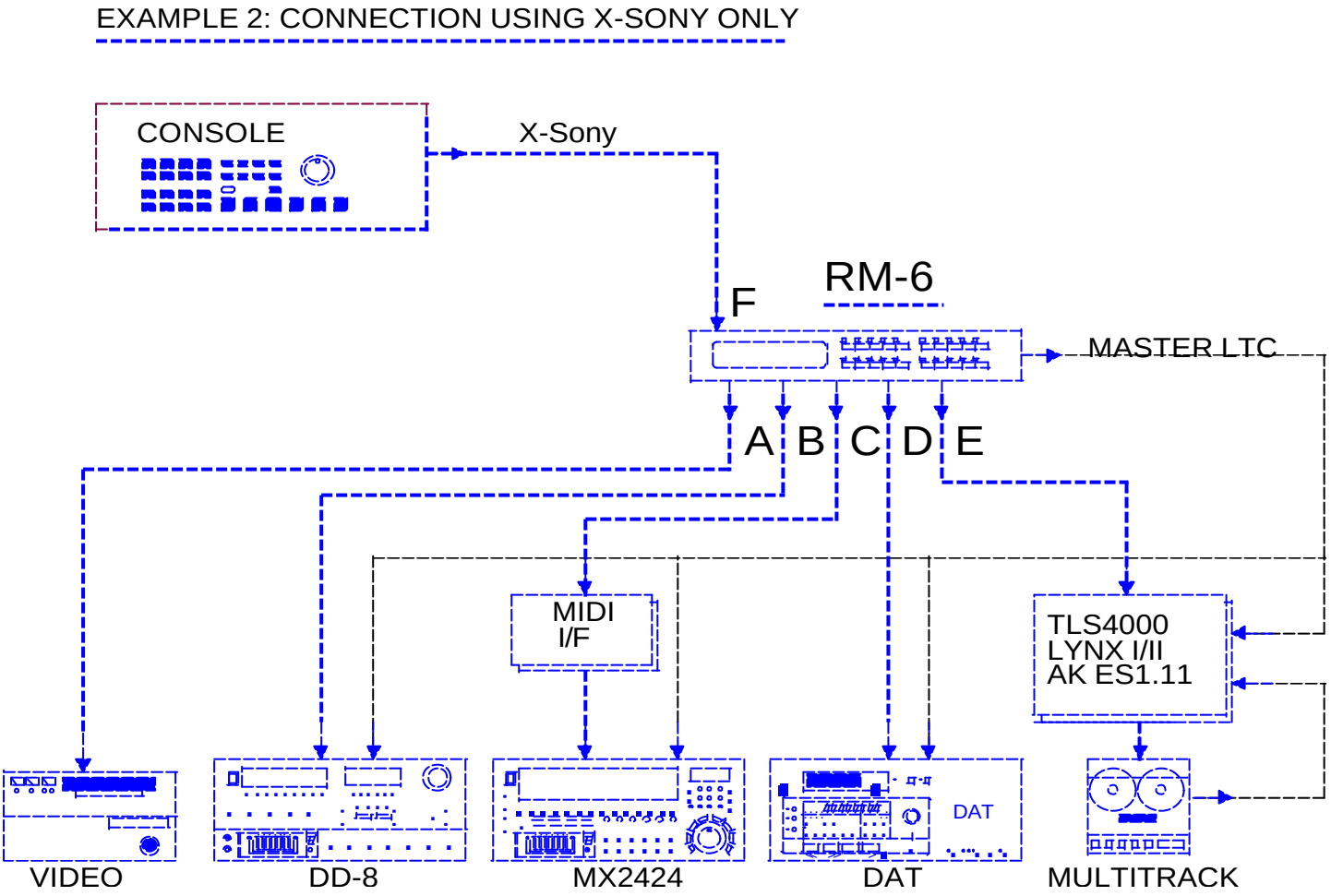

This example shows how to connect legacy parallel machines to the system. The MX2424 requires a midi interface only if the user wishes to use the MX2424 parallel remote.

Basic Format = Sony P2

CMD1	Data Count	CMD2	Data 1	.....	Data N N= Max 15	Checksum

All normal sony commands and data requests will operate to the current Master Machine. in addition the following commands are available for system control and individual machine control.

CMD1

0X = Command From controller to CB
1X = Reply From CB to controller

Data Count

Number of data bytes 0..15 (Excluding CMD1, CMD2, CHECKSUM, Including CMD3)

CMD2

A0 = CB Extension Command

CMD3

If used, the first byte of data is used as a proprietary command byte

Checksum

8 bit sum of CMD1, CMD2 Data1..DataN

Cyclic-Reporting: Serial control, Video Syncs and Timecode

A Sony Protocol serial interface requires either video syncs or timecode. Using the Cyclic-Reporting facility of the extended protocol only one RS422 or RS232 port is required as the messages are synchronised with the video frame edge. Benefits of cyclic-reporting include simpler multi-machine software, and a separate status display may be implemented with little software overhead.

Compound Commands: Looping, Auto-edit, Rehearse, Instant Replay, Again

The extended protocol provides compound commands where a single command can initiate a repeat looping function, or locate and play function.

EA-1 Sony Protocol Analyzer

Using the **SA-1** Sony Protocol Analyzer hardware the EA-1 Extended protocol Analyzer gives an overview of the extended commands and status. This is available as a development and test tool.

Here is a list of currently available commands:-

Cyclic Control	CMD 1	CMD 2	CMD 3	Parameter	Parameter Length Bytes	Reply
Cyclic Data On	02	A0	85	01	1	None
Cyclic Data Off	02	A0	85	00	1	10 01

CB Cyclic Status	CMD 1	CMD 2	CMD 3	Parameter	Parameter Length Bytes
Master Machine Position	1A	A0	80	Current Master Number	1
				Position MSB frames	1
				Position MSB	1
				Position LSB	1
				System Status A	1
				Current Selected Machine	1
				Error Message 0=No Error Message	1
				System Rec Data: Bits 0-2 = Bank, bits 3-7 = Machine (Machine 0= System)	1
				ADR Status	1
Machine Status	1A	A0	81	Machine number (1..36 = Machine)	1
				Tally	1
				Status-1	1
				Status-2	1
				Position MSB frames	1
				Position frames	1
				Position LSB frames	1
				Sync Error +/- 127 frames	1
				Status-3	1
Machine Offset	1x	A0	82	Machine Number	1
				Offset MSB Frames	1
				Offset frames	1
				Offset LSb Frames	1
				Offset Sub Frames (Used by Timeline Lynx Only)	1
				Record In {fpd}	3
				Record Out {fpd}	3
Machine Details	1c	A0	83	Machine Number	1
				Sony ID MSB.LSB	2
				BITS 0-4: Number of Record Tracks 0..7 0= None, 1=A+V, 2= 8..7=48 BITS 5-8: Machine Type 0 = VTR, 1 = Digital VTR, 2 = ATR, 3 = Stereo DAT, 4= Two Track DAT	1
				Status-4	1
				Name ASCII	6
					Parameter

CB Cyclic Status	CMD 1	CMD 2	CMD 3	Parameter	Length Bytes
Machine Ready Data	18	A0	84	Machine Number	1
				Record Ready Track Bit Map 1-7 Bytes	3
Machine Record Data	1A	A0	85	Machine Number	1
				Record Track Bit Map 1-7 Bytes	8
Interface (IFACE) Config Data	1	A0	88	Machine Number	1
				Offset	1
				Interface Config Data	8
					`
System (Unit) Config Data	1A	A0	90	Offset	1
				System Config Data	8
Track Ready Bit Map	1X	A0	91	96 tracks (Maximum see Menu 9) of System record Ready data in bit map.	12
Trk Record Bit Map	1X	A0	92	96 tracks (Maximum see Menu 9) of System record data in bit map.	12
Logical Track map	1A	A0	93	Offset	1
				System Logical to physical track map data	8
System Specification	1A	A0	94	XSONY Revision Number: Major	1
				XSONY Revision Number: Minor	1
				Number of Machine Ports	1
				Number of Track Arm Keys	1
				MRSR System Flag (1= MR System)	1
				Unit Config data Length (Bytes)	1
				Interface Config data length (Bytes)	1
				Logical Track Map data length (bytes)	1
				Macro Map data Length (bytes)	1
Macro Key Data	1A	A0	95	Offset	1
				Macro Key Data	8
Bit Macro Data	19	A0	96	Macro Tally	4
				M4Byte	1
				Macro Bit	3
				M8Byte	1

Cyclic Status data

After receiving a **Cyclic data Enable Command (02 A0 85 01)** SR systems will send cyclic data to update the controlling device.

The sending sequence for a SR-3 is as follows:-

At the beginning of each frame **Master Machine Position**. This is linked to the Video Interrupt, if no video syncs are connected then this message will **NOT** be sent.

Approximately in the middle of each frame one of the following messages in rotation:

SR-3 Middle of Frame Messages

Message	Frame Number															
Machine B Status	1	7	13	19	25	31	37	43	49	55	61	67	73	79	85	91
Machine C Status	2	8	14	20	26	32	38	44	50	56	62	68	74	80	86	92
Machine D Status	3	9	15	21	27	33	39	45	51	57	63	69	75	81	87	93
Reader Status	4	10	16	22	28	34	40	46	52	58	64	70	76	82	88	94
Generator Status	5	11	17	23	29	35	41	47	53	59	65	71	77	83	89	95
Logical Ready Map	6								54							
Logical Record Map		12								60						
Machine B Offset			18								66					
Machine C Offset				24								72				
Machine D Offset					30								78			
Machine B Details						36								84		
Machine C Details							42								90	
Machine D Details								48								96

The rate of update on the machine information will depend on the number of machines as follows:-

Number of serial Ports	Master Position	Machine Status	Logical Ready Bit Map	Logical Record Bit Map	Machine Offset	Machine Details
3	1	6	48/Change	48/Change	48	48
4	1	7	56/Change	56/Change	56	56
5	1	8	64/Change	64/Change	64	64
6	1	9	72/Change	72/Change	72	72

In addition to the cyclic update an update on change facility is included for the Logical Ready and Logical Record Bit Maps.

In this mode ACK's are **NOT** sent in response to commands, the controlling device should monitor the continual reception of cyclic data to ensure that the connection is still active.

To disable send a **Cyclic data Disable Command (02 A0 85 00)**

Tally Values					
0	Undefined	8	Jog Reverse	16	Locate
1	Stop	9	Fast Forward	17	Goto-Q
2	Pause	10	Fast Reverse	14	Eject
3	Play	11	Shuttle Forward	19	Record On
4	Reverse Play	12	Shuttle Reverse	20	Record Off
5	Forward Wind Laced	13	Variplay Forward	21	Record Preset
6	Reverse Wind Laced	14	Variplay Reverse	22	
7	Jog Forward	15	Unlaced Stop	23	

BIT FLAGS								
Name	Bit-7	Bit-6	Bit-5	Bit-4	Bit-3	Bit-2	Bit-1	Bit-0
Status-1	Direction	Not Locked	Record	Locate	Armed	Record Inhibit	Rehearse	Input Monitor
Status-2	00 = Play Speed 01 = Fast speed 10 = Slow/Stop Speed 11 = Stop/Slow Speed		Machine Goto Flag Set	Machine Cued	Stopped	000 = Normal 001 = Tape End 010 = Tape Start 011 = Local 100 = No Tape 101 = Disabled 110 = No MR3 (MR Systems Only) 111 = No Comms		
Status-3	Field-1	Ram Scrub	Prog. Play	Chase Group	Chase Active			Record Enable
Status-4					Machine Timecode Standard 00= EBU, 01= SMPTE 10= Film, 11= Drop		00= Disable 01= A1-A4 10= A1-A4+V 11= Assemble	
System Status A	Master Machine in Locked Play	System Not Locked	One or more machines in Record	One or More Machines Locating	Local Control Only	System data changed	00 = EBU 25 fps 01 = SMPTE 30 fps 10 = Film 24 fps 11 = SMPTE Drop	
ADR Status	Out Point Enabled	DAT Record		00 = Undef 01= Before 10= During 11= After		000= Off 001= Rehearse 010= Auto 011= Manual 100= Review		
System Status S	Master Machine in Locked Play	System Not Locked	One or more machines in Record	One or More Machines Locating	New Monitor Kbd Data (Studer)	System data Changed	00 = EBU 25 fps 01 = SMPTE 30 fps 10 = Film 24 fps 11 = SMPTE Drop	

Master Machine Position Error Message

1: Not Record Enabled

The machine you are trying to record arm is not record enabled see section 1.11 and 3.09. Check the Machine:Track to which the key is assigned to using **[Recall]** followed by the Track Key.

2: ! Record Inhibit !

The tape on the machine you are trying to record arm has the record inhibit set on the tape that you are using.

3: !System Not Locked

Attempted to enter record when the system is not locked, See section 7.006.

4: ! Key Lock On !

Macro 138 disables the following keys. If you do not have this macro key fitted then it will be necessary to hard reset the unit as the memory has become corrupted.

5: ! OUT before IN !

Not possible to perform an Auto-Edit or Rehearse. If you are not using the record out then use Clear (**[Shift]** followed by **[0]**),followed by **[Store]** followed by **[Out]** to disable the out point.

6: ! Comms-Local-Tape

The machine to selected or the master machine is either not communicating, switched to local, or has no tape.

7: ! Macros Protected

Not possible to change macro's see menu 7.022.

8: ! No Track Mapped!

Use Recall followed by the Track arm key to check the track mapping see section 9.00 and T2.00.

9: ! Record Enabled !

Changing the offset on a record enabled machine is not allowed. If it necessary to change the offset disable the record first.

10: Locate to Start

If Rewind is active and the selected machine is within 20 seconds of the user defined start (**[Recall]** followed by **[<<]**) then a Locate to Start will be issued.

11: TC Jump or Pre-Rol

Record in point missed due to timecode edit or insufficient pre-roll to allow the backup DAT to lock and record it's ident.

12: Commands Disabled!

Commands to the Selected machine or Master are disabled, see menu (On MR-3 check front panel switch).

13: Video Not Stopped

Changing of edit mode when in play is inhibited on video machines because of the head switching, Stop machine to change.

14: Alg & Video Enable

The track you are trying to arm is disabled in menu 35 "Analog and Video Rec Rdy".

15: Not all in Record

During an Auto-Edit, not all armed machines entered record.

16: ! Crash Enabled !

Command is not possible because the selected machine or Master is Crash Record Enabled.

17: ! No Tape !

No Tape in machine

18: Macro Not Fitted

Macro Number as defined by key not implemented.

19: No Macro defined

No Macro defined for key, enter macro number followed by [Shift], followed by [Store], followed by key.

20: !Not In Record!

Twenty frames after the record in point of an Auto-Record a machine was not reporting record.

21: No Tracks Armed

Video Editor only, edit attempted with no tracks armed.

22: !No EEPROM Access!

EEprom not found during power-up, reset unit using small reset button or power on and off. If problem persists contact CB Electronics.

23: !Backup Machine!

No Chase command may be issued to the backup machine. See **Setup | Root | ADR/Auto | Options | Menu 79: Backup Machine**

24: !Rec Out Disabled!

Record out disabled by Macro Key 75. Out Enable

25: !System in Local!

An external command was recieved but not implemented because the system is currently selected to local mode.

26: Command Not Fitted

Recieved a X-Sony Command that is not implemented or not installed in the current software

Port numbers

Port-A = 01, port B= 02....
Reader = 00
Generator = $FF

CB Format Speed & Direction

Speed

0..50 = speed in 1/25 Play speed increments:
1= 1/25 Play Speed, 25= Play Speed, 50 = 2 * play speed
51..127 = (2+(n-50)) * Speed
51= 3 * play speed, 52= 4* play speed, 58= 10 * Play speed

Direction

Add $80 or 128 for reverse
25 ($17) = Play Forward, 153 ($97) = Play Reverse

0X A0 89 Commands to Current Selected Machine Port
0X A0 8B mm Commands to 'mm' Serial/Machine Port
$80= All, $81= Group, $FF= Generator, $00 = Reader, 1,2.. = A,B..
0X A0 8C Commands to Current Master Port

Command	CMD 1, 2, 3	CMD 1, 2,3,4	Cmd	Data	Bytes
Select Machine Port	02 A0 8C	03 A0 8B mm	00		0
Pause	02 A0 89/8C	03 A0 8B mm	01		0
Play	02 A0 89/8C	03 A0 8B mm	02		0
Instant Replay	02 A0 89/8C	03 A0 8B mm	03		0
Reverse Play	02 A0 89/8C	03 A0 8B mm	04		0
Again+Play	02 A0 89/8C	03 A0 8B mm	05		0
Reverse Wind	02 A0 89/8C	03 A0 8B mm	06		0
Forward Wind	02 A0 89/8C	03 A0 8B mm	07		0
Record On	02 A0 89/8C	03 A0 8B mm	08		0
Record Off	02 A0 89/8C	03 A0 8B mm	09		0
Crawl Forward	02 A0 89/8C	03 A0 8B mm	0A		0
Crawl Reverse	02 A0 89/8C	03 A0 8B mm	0B		0
Park (Goto In-Pre-roll)	02 A0 89/8C	03 A0 8B mm	0C		0
Stop	02 A0 89/8C	03 A0 8B mm	0D		0
Locate Out Point	02 A0 89/8C	03 A0 8B mm	0E		0
Make Master	02 A0 89	03 A0 8B mm	0F		0
Rehearse	02 A0 8C		10		0
Auto Edit	02 A0 8C		11		0
	02 A0 89/8C	03 A0 8B mm	12		0
	02 A0 89/8C	03 A0 8B mm	13		0
Chase Here	02 A0 89/8C	03 A0 8B mm	14		0
	02 A0 89/8C	03 A0 8B mm	15		0
All Chase On	02 A0 89/8C		16	0= Off 1= On $FF= Toggle	1
	02 A0 89/8C		17		
Clear offsets and Chase	02 A0 89/8C		18		
Machine Track Arm	0X A0 89	0X A0 8B mm	19	Sony Format Track Arm Data	X
Sub-Frame Offset	03 A0 89/8C	04 A0 8B mm	1A	Sub Frame Offset	1
Toggle Chase	02 A0 89/8C	03 A0 8B mm	1B	0= Off 1= On $FF= Toggle	1
Toggle Rec Enb	02 A0 89/8C	03 A0 8b mm	1C	0= Off 1= On $FF= Toggle	1
Jog	03 A0 89/8C	04 A0 8B mm	1D	CB Format Speed & direction	1
Shuttle	03 A0 89/8C	04 A0 8B mm	1E	CB Format Speed & direction	1
Variplay	03 A0 89/8C	04 A0 8B mm	1F	CB Format Speed & direction	1

Commands With Time (FF SS MM HH) Data
0X A0 89 Commands to Current Selected Machine Port
0X A0 8B mm Commands to 'mm' Serial/Machine Port
0X A0 8C Commands to Current Master Port

Command	CMD 1, 2, 3	CMD 1, 2,3,4	Command Byte	Data	Data Bytes
Locate	06 A0 89/8C	07 A0 8B mm	20	FF SS MM HH	4
Locate & Play	06 A0 89/8C	07 A0 8B mm	21	FF SS MM HH	4
Set In point	06 A0 89/8C	07 A0 8B mm	22	FF SS MM HH	4
Set Out point	06 A0 89/8C	07 A0 8B mm	23	FF SS MM HH	4
Set Offset	06 A0 89/8C	07 A0 8B mm	24	FF SS MM HH	4
Set Generator Time	06 A0 89/8C	07 A0 8B mm	25	FF SS MM HH	4
Set Pre-roll #	06 A0 89/8C	07 A0 8B mm	26	FF SS MM HH	4
Set Loop delay #	06 A0 89/8C	07 A0 8B mm	27	FF SS MM HH	4
Set Post-roll #	06 A0 89/8C	07 A0 8B mm	28	FF SS MM HH	4
Set Tape Begin	06 A0 89/8C	07 A0 8B mm	29	FF SS MM HH	4
Set Tape End	06 A0 89/8C	07 A0 8B mm	2A	FF SS MM HH	4
Set Instant Replay #	06 A0 89/8C	07 A0 8B mm	2B	FF SS MM HH	4
Set Instant Record #	06 A0 89/8C	07 A0 8B mm	2C	FF SS MM HH	4
Loop	0A A0 89/8C	0B A0 8B mm	2D	In time FF SS MM HH Out time FF SS MM HH	8
Locate Forward Relative to current position	06 A0 89/8C	07 A0 8B mm	2E	FF SS MM HH	
Locate Reverse Relative to current position	06 A0 89/8C	07 A0 8B mm	2F	FF SS MM HH	

* Not Yet Implemented
# Global Parameter

Commands With Frame per Day Data 0X A0 89 Commands to Current Selected Machine Port 0X A0 8B mm Commands to 'mm' Serial/Machine Port 0X A0 8C Commands to Current Master Port					
Command	CMD 1, 2, 3	CMD 1, 2,3,4	Command Byte	Data	Data Bytes
Locate	05 A0 89/8C	06 A0 8B mm	30	XX XX XX fpd	3
Locate & Play	05 A0 89/8C	06 A0 8B mm	31	XX XX XX fpd	3
Set In point	05 A0 89/8C	06 A0 8B mm	32	XX XX XX fpd	3
Set Out point	05 A0 89/8C	06 A0 8B mm	33	XX XX XX fpd	3
Set Offset	05 A0 89/8C	06 A0 8B mm	34	XX XX XX fpd	3
Set Generator Time	05 A0 89/8C	06 A0 8B mm	35	XX XX XX fpd	3
Set Pre-roll #	05 A0 89/8C	06 A0 8B mm	36	XX XX XX fpd	3
Set Loop delay #	05 A0 89/8C	06 A0 8B mm	37	XX XX XX fpd	3
Set Post-roll #	05 A0 89/8C	06 A0 8B mm	38	XX XX XX fpd	3
Set Tape Begin	05 A0 89/8C	06 A0 8B mm	39	XX XX XX fpd	3
Set Tape End	05 A0 89/8C	06 A0 8B mm	3A	XX XX XX fpd	3
Set Instant Replay #	05 A0 89/8C	06 A0 8B mm	3B	XX XX XX fpd	3
Set Instant Record #	05 A0 89/8C	06 A0 8B mm	3C	XX XX XX fpd	3
Loop	08 A0 89/8C	09 A0 8B mm	3D	In time XX XX XX fpd Out time XX XX XX fpd	6
Locate Forward Relative to current position	05 A0 89/8C	06 A0 8B mm	3E	XX XX XX fpd	
Locate Reverse Relative to current position	05 A0 89/8C	06 A0 8B mm	3F	XX XX XX fpd	4

* Not Yet Implemented
# Global Parameter

Commands with Midi Style Data $H, $M, $S, $F
0X A0 89 Commands to Current Selected Machine Port
0X A0 8B mm Commands to 'mm' Serial/Machine Port
0X A0 8C Commands to Current Master Port

Command	CMD 1, 2, 3	CMD 1, 2,3,4	Command Byte	Data	Data Bytes
Locate	06 A0 89/8C	07 A0 8B mm	40	XX XX XX XX MIDI Time	4
Locate & Play	06 A0 89/8C	07 A0 8B mm	41	XX XX XX XX MIDI Time	4
Set In point	06 A0 89/8C	07 A0 8B mm	42	XX XX XX XX MIDI Time	4
Set Out point	06 A0 89/8C	07 A0 8B mm	43	XX XX XX XX MIDI Time	4
Set Offset	06 A0 89/8C	07 A0 8B mm	44	XX XX XX XX MIDI Time	4
Set Generator Time	06 A0 89/8C	07 A0 8B mm	45	XX XX XX XX MIDI Time	4
Set Pre-roll #	06 A0 89/8C	07 A0 8B mm	46	XX XX XX XX MIDI Time	4
Set Loop delay #	06 A0 89/8C	07 A0 8B mm	47	XX XX XX XX MIDI Time	4
Set Post-roll #	06 A0 89/8C	07 A0 8B mm	48	XX XX XX XX MIDI Time	4
Set Tape Begin	06 A0 89/8C	07 A0 8B mm	49	XX XX XX XX MIDI Time	4
Set Tape End	06 A0 89/8C	07 A0 8B mm	4A	XX XX XX XX MIDI Time	4
Set Instant Replay #	06 A0 89/8C	07 A0 8B mm	4B	XX XX XX XX MIDI Time	4
Set Instant Record #	06 A0 89/8C	07 A0 8B mm	4C	XX XX XX XX MIDI Time	4
Loop	0A A0 89/8C	0B A0 8B mm	4D	In XX XX XX XX MIDI Time Out XX XX XX XX MIDI Time	8
Locate Forward Relative to current position	06 A0 89/8C	07 A0 8B mm	4E	XX XX XX XX MIDI Time	
Locate Reverse Relative to current position	06 A0 89/8C	07 A0 8B mm	4F	XX XX XX XX MIDI Time	

* Not Yet Implemented
# Global Parameter

The following commands are reseverd for internal use within the SERVER software
$0X A0 $E0..$FF

There are over 160 macro keys available on the CB keyboard these are also available on the serial port, only a proportion are useful in this context. Use an extra byte if you need a shift/store/recall/trim functions. If no extra byte is sent the default is 0, the parameter value is as follows:-

0	Normal	
1	Store	Need to also send keyboard data to store
2	Recall	Recall to
3	Trim+	
4	Trim-	
5	Shift	

Controller Macro Commands	CMD-1	CMD-2	Data (Macro Number)	Shift Store Recall
Grab Time (Mark)	02	CB	$49	
Instant record	02	CB	$4A	
Auto record	02	CB	$4C	
All Stop	02	CB	$53	
Instant Replay	02	CB	$79	
Step Forward	02	CB	$7E	
Step Reverse	02	CB	$7F	
Again	02	CB	$84	
Again = Play	02	CB	$85	
Wind 2x	02	CB	$86	
Wind 4x	02	CB	$87	
Wind 6x	02	CB	$88	
Clear Chase & Offsets	03	CB	$AF	$05
Auto Edit	02	CB	$51	
Rehearse	02	CB	$52	
Loop between in and out	02	CB	$42	
Record Enable	03	CB	$8F	$05
Auto Set Logical to Physical track map	03	CB	$CA	$05
Set Default Logical to Physical map	03	CB	$CB	$05

Action Data From Machine Controller

Description	Cmd-1	Cmd-2	Cmd-3	Data	Bytes
Mark Time	15	A0	01	Timecode Standard	1
				Timecode Position (Framecount)	3

0X A0 8A Unit Setup Data Offsets					
Offset	**Menu**	**Function**	**Offset**	**Menu**	**Function**
0	20:	Timecode Standard	17	32:	Jog On
1	21:	Film Standard	18	4:	Check Lock
2	26:	Macro Protection	19	5:	Offset Enable
3	9:	System ready Length	20	10:	Input Track Arm
4	77:	Auto Record	21	11:	Track Map
5	78:	At end of Edit	22	14:	All AV Enable
6	3:	Record on Command	23	22:	All Auto standard
7	79:	Backup Machine	24	29:	GP 4,5,6 Mode
8	23:	Timecode reader	25	30:	GP 3 Mode
9	28:	Locate Command	~~26~~	24:	Reader Incremental & Direction Test
10	8:	Track Arm Type	27	6:	Virtual Rec Tally
11	27:	Serial A type	28	13:	In/Out Keys
12	12:	Constant Offset	29	7:	Track Arm Keys System/Mcn
13	16:	LTC/RS422	30		Lock Tally From System/Master
14	17:	Wait For Slaves	31		Audio Machines Record Enabled?
15	18:	Group Locate	32		
16	31:	Jog Response			

Note: The offset's remain constant, the menu numbers refer to the current software and may change

Controller Commands that Request Data/without data These comands require cyclic data to be enabled	**CMD 1**	**CMD 2**	**CMD 3**	**Parameter**	**Parameter Length Bytes**	**CB Reply String**
Request Unit Config Data (up to 128 Bytes)	01	A0	00			
Request Machine Iface Data (up to 128 Bytes)	02	A0	01	Machine Number	1	
Request System Track Map (up to 192 bytes)	01	A0	02			
Reset Error Message	01	A0	03			
Run Exit Setup Routine	01	A0	04			
Request Macro Map (up to 64 bytes)	01	A0	05			
Request System specification	01	A0	06			
	01	A0	07			
	01	A0	08			

Note *= Not yet implemented

Controller Commands with Data	CMD 1	CMD 2	CMD 3	Parameter	Length Bytes
System (Unit) Config Data	0X	A0	80	Offset	1
				Data	X-2
Machine Iface Config Data	0X	A0	81	Machine Number	1
				Offset	1
				Data	X-3
Logical to Physical Track map	0X	A0	82	Offset	1
data				Data Byte 0..Data Byte 7	8
Machine Specific Sony Format Command eg. Play Machine 'B' = 04 A0 82 02	0X	A0	83	Machine Number 0= Master, 1..32 = individual machines	1
20 01 49				Sony Format Command	X-2
System Track Arm Command	0X	A0	84	System Track Arming Bit Map (96 Tracks Max)	12
Cyclic Data Enable/Disable	02	A0	85	0= disable, 1= Normal, 2= ADR	1
Bit Macro Data	0E	A0	86	Bit Macro Data	13
Reset ADR Loop List	02	A0	87	Data0 1= Clear All	
Add ADR Loop Entry	0D	A0	88	In Time FF:SS:MM:HH	4
Record Tracks used by MR				Out Time FF:SS:MM:HH	4
Systems Only				Loop Number (ASCII)	4
				Logical Track 1 (Hex)	1
				Logical Track 2 (Hex)	1
Commands to current Machine Port	0X	A0	89	Command	1
See Table				Data	X-2
	0X	A0	8A		
Commands to specified	0X	A0	8B	Port Number	1
Machine Port				Command	1
See Table				Data	X-3
Commands to Master Machine Port	0X	A0	8C	Command	1
See Table				Data	X-2